THERMA-TRU® DOORS

L. F. SCHMIDT LICENSE No. 43409 STATE OF FLORIDA PROFESSIONAL ENGINEER

Digitally signed by Lyndon F Schmidt
Date: 2026.08.10 10:27:58 -04'00'

This item has been digitally signed and sealed by **L. F. Schmidt, P.E.** on the date adjacent to the seal.

Printed copies of this document are not considered signed and sealed and the signature must be verified on any electronic copies.

THIS PRODUCT APPROVAL IS VALID ONLY FOR THE STATE OF FLORIDA

"Advanta" Lite Frame Assembly "NON-IMPACT"

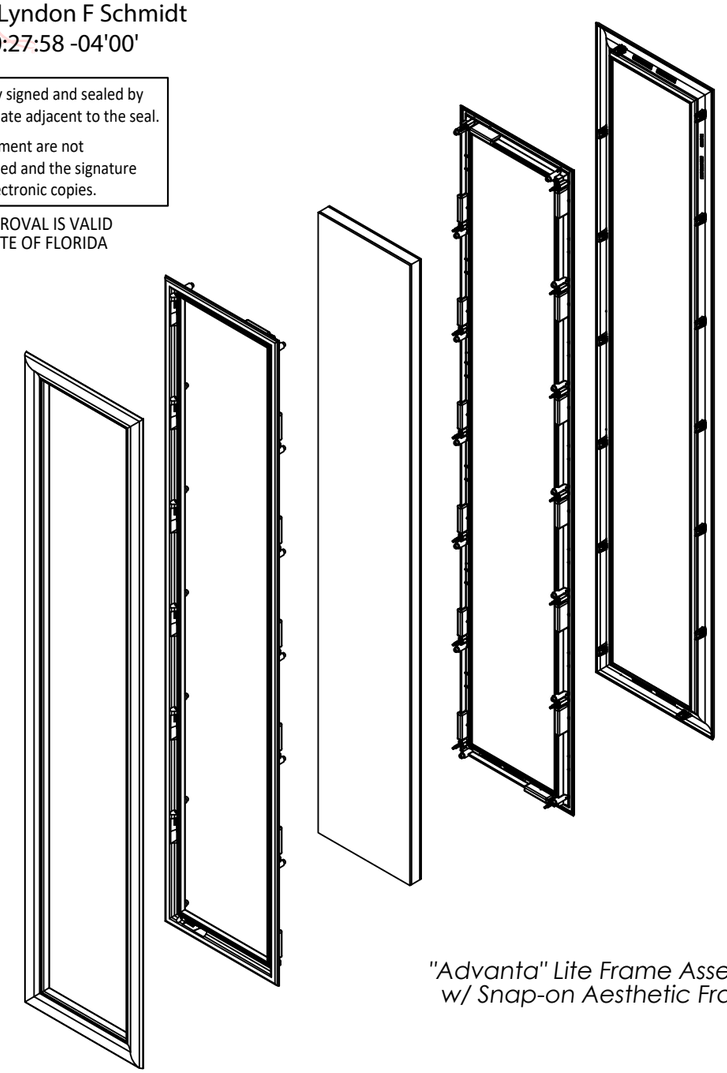

"Advanta" Lite Frame Assembly w/ Snap-on Aesthetic Frame

GENERAL NOTES

1. This product has been evaluated and is in compliance with the 9th Edition (2026) Florida Building Code (FBC) structural requirements excluding the High Velocity Hurricane Zone (HVHZ).
2. When used in areas requiring wind borne debris protection, this product is required to be protected with an impact resistant covering that complies with FBC Sections 1609.1.2 & R301.2.1.2.
3. This product is approved for use as a substitute lite frame assembly in conjunction with a Therma-Tru "Non-Impact" fixed sidelite possessing a current Therma-Tru Florida Statewide product approval.
4. The design pressure (DP) rating shall be the lesser of the DP rating shown in this approval or the DP rating shown in the Therma-Tru "Non-Impact" fixed sidelite approval being used.
5. The fixed sidelite panel and lite opening size shall not exceed the sizes shown in this approval or the Therma-Tru "Non-Impact" fixed sidelite approval being used.
6. This product has been tested in the Therma-Tru fixed sidelite panels as specified on Sheet 3 of this approval. This product is for use with a Therma-Tru "Non-Impact" fixed fiberglass or steel sidelite only.
7. This product may not be installed into an existing opaque door. It may be used as a substitute glazing in the fixed sidelite of an opaque door system w/ sidelites possessing a current Therma-Tru Florida Statewide product approval.

TABLE OF CONTENTS

SHEET #	*DESCRIPTION*
1	Typical Elevations, Design Pressures and General Notes
2	Lite Frame & Glazing Details
3	Door Panel Details (Therma-Tru)

SIDELITE PANEL TYPE	*MAX. NOMINAL PANEL DIMENSION*	*MAX. DESIGN PRESSURE (PSF)*	
		POSITIVE	*NEGATIVE*
FIBERGLASS	**1'-2" X 8'-0"**	**+75.0**	**-75.0**
STEEL (24 GA.)	**1'-2" X 8'-0"**	**+75.0**	**-75.0**

Documents Prepared By:
Lyndon F. Schmidt
P.E. No. 43409
RW BUILDING CONSULTANTS, INC.
P.O. Box 230, Valrico, FL 33595
Phone No.: 813.659.9197
FBPE Registry No. 9813

PRODUCT: *THERMA-TRU*

PART OR ASSEMBLY: *TYPICAL ELEVATIONS, DESIGN PRESSURES & GENERAL NOTES*

REVISIONS

NO.	DATE		BY
2	7/01/26	UPDATE TO 9TH ED. (2026) FBC	LFS
1	7/24/23	UPDATE TO 8TH ED. (2023) FBC	LFS

DATE: 11/29/22
SCALE: N.T.S.
DWG. BY: RW
CHK. BY: LFS
DRAWING NO.: FL-33943.5
SHEET 1 OF 3

© 2022 R.W. BUILDING CONSULTANTS INC.

Z:\2023 FBC Drawings\Therma-Tru\FL-33943 R3\FL-33943.5.dwg

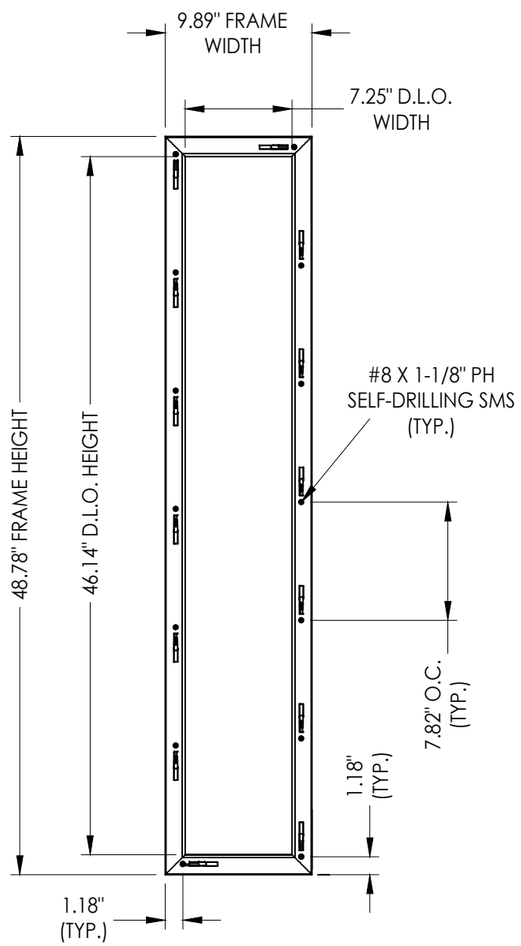

8" X 47" "Advanta" BASE FRAME ASSEMBLY

NOTE: D.L.O. SHOWN w/out AESTHETIC COVER

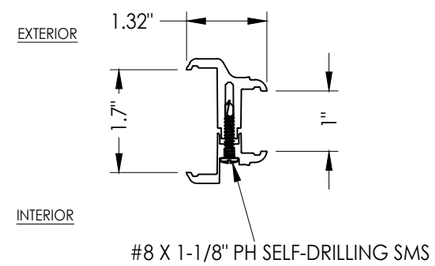

2A ***"ADVANTA" BASE FRAME***
1" GLAZING

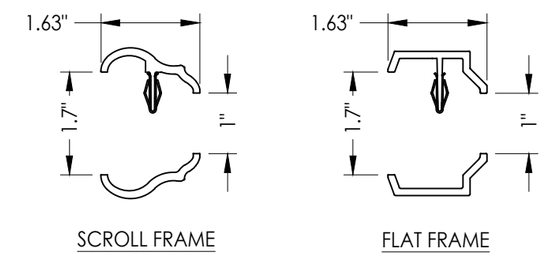

2B ***"ADVANTA" AESTHETIC SNAP-ON FRAMES***

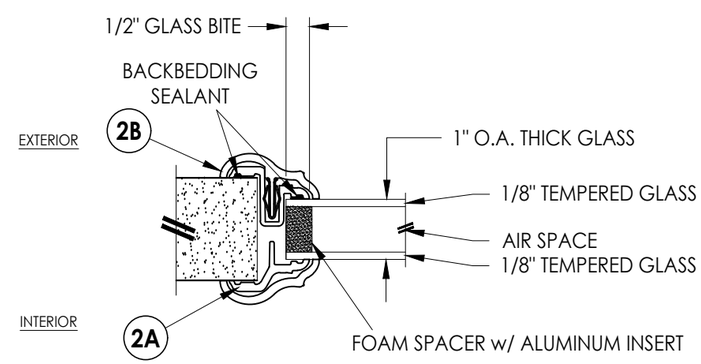

G1 ***GLAZING DETAIL***
1" Insulated Glass
w/ Aesthetic Cover

Documents Prepared By:
Lyndon F. Schmidt
P.E. No. 43409
RW BUILDING CONSULTANTS, INC.
P.O. Box 230, Valrico, FL 33595
Phone No.: 813.659.9197
FBPE Registry No. 9813

PRODUCT: *THERMA–TRU*

PART OR ASSEMBLY: *LITE FRAME & GLAZING DETAILS*

REVISIONS

NO.	DATE	BY
2	7/01/26	LFS
1	7/24/23	LFS

UPDATE TO 9TH ED. (2026) FBC
UPDATE TO 8TH ED. (2023) FBC

DATE: 11/29/22
SCALE: N.T.S.
DWG. BY: RW
CHK. BY: LFS
DRAWING NO.: FL–33943.5
SHEET 2 OF 3

© 2022 R.W. BUILDING CONSULTANTS INC.

Z:\2023 FBC Drawings\Therma-Tru\FL-33943 R3\FL-33943.5.dwg

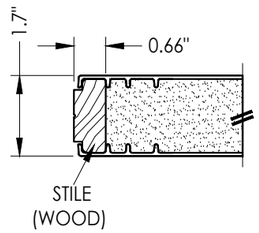

1/3 **HORIZONTAL CROSS SECTION**

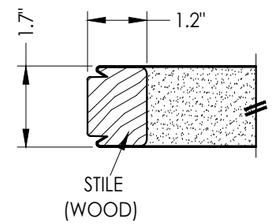

3/3 **HORIZONTAL CROSS SECTION**

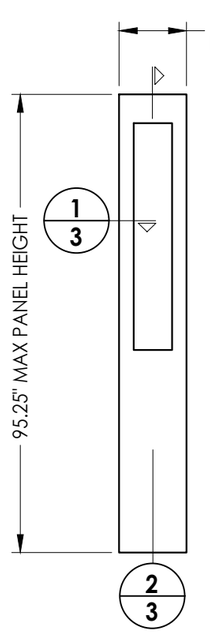

FIBERGLASS SIDELITE PANEL
Therma-Tru 8'- 0"

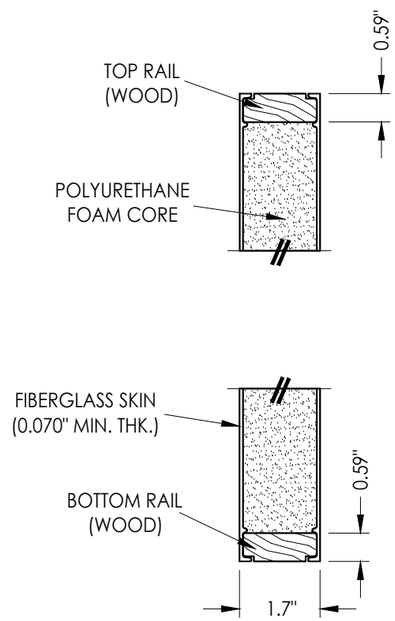

2/3 **VERTICAL CROSS SECTION**

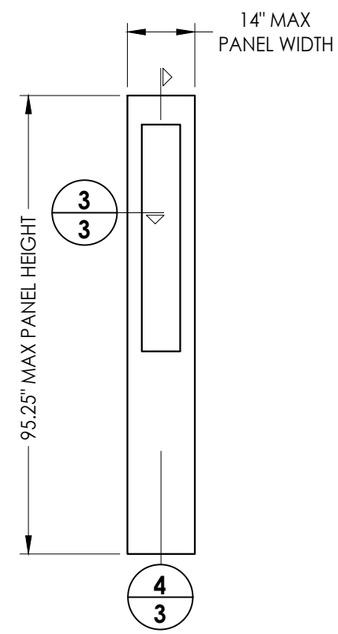

STEEL SIDELITE PANEL
Therma-Tru 8'- 0"

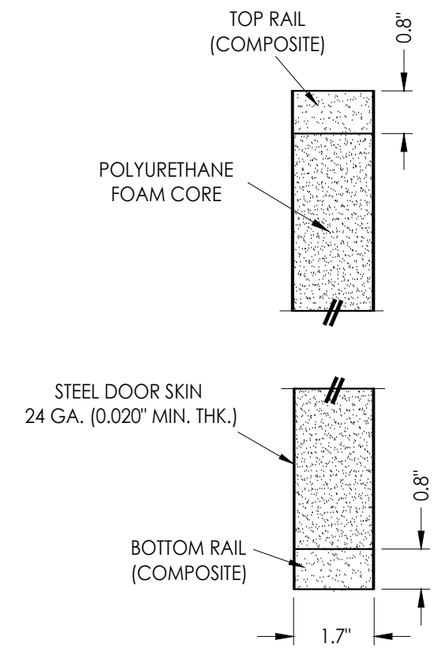

4/3 **VERTICAL CROSS SECTION**

NOTE: SEE GENERAL NOTE 4, SHEET 1 FOR DESIGN PRESSURE LIMITATIONS

Documents Prepared By:
Lyndon F. Schmidt
P.E. No. 43409
RW BUILDING CONSULTANTS, INC.
P.O. Box 230, Valrico, FL 33595
Phone No.: 813.659.9197
FBPE Registry No. 9813

PRODUCT: THERMA–TRU

PART OR ASSEMBLY: DOOR PANELS DETAILS (THERMA–TRU)

REVISIONS

NO.	DATE	BY
2	7/01/26	LFS
1	7/24/23	LFS

UPDATE TO 9TH ED. (2026) FBC
UPDATE TO 8TH ED. (2023) FBC

DATE: 11/29/22
SCALE: N.T.S.
DWG. BY: RW
CHK. BY: LFS
DRAWING NO.: FL–33943.5
SHEET 3 OF 3

© 2022 R.W. BUILDING CONSULTANTS INC.

Z:\2023 FBC Drawings\Therma-Tru\FL-33943 R3\FL-33943.5.dwg